US 20140317979A1

(19) **United States**

(12) **Patent Application Publication**

(10) **Pub. No.: US 2014/0317979 A1**

(43) **Pub. Date: Oct. 30, 2014**

Carlson

(54) **PULSE RECOILING SYSTEM**

(71) Applicant: **Greg Carlson**, Methuen, MA (US)

(72) Inventor: **Greg Carlson**, Methuen, MA (US)

(21) Appl. No.: **14/167,581**

(22) Filed: **Jan. 29, 2014**

Related U.S. Application Data

(60) Provisional application No. 61/757,912, filed on Jan. 29, 2013.

Publication Classification

(51) **Int. Cl.**
F41A 25/10 (2006.01)

(52) **U.S. Cl.**
CPC ***F41A 25/10*** (2013.01)
USPC **42/1.06**

(57) **ABSTRACT**

A pulse recoiling system located over the barrel portion of a sub-cal weapon. The pulse recoiling system is located above the barrel of the weapon and includes a shortened and modified bolt, a threaded operating rod which screws into the bolt transfer block, and a static buffer housing that contains a recoil spring with a small round spacer on a first end and an off-set pressure cap on a second end. When the trigger is depressed, a hammer strikes a firing pin and a cartridge discharges. The hammer resting against the modified bolt, forward spring tension and length of the operating rod hold the cartridge in chamber for a fraction of a second after discharge. The bolt then cycles rearward, the spent casing is ejected, and the forward buffer spring is compressed by the reward force created by the discharged cartridge. The operating rod compressing the buffer spring restricts the length of travel of the bolt thereby transferring any recoil forward of the rifle over the length of the operating rod, thereby minimizing the recoil felt by a user. The weapon may be a rifle, pistol or other weapon.

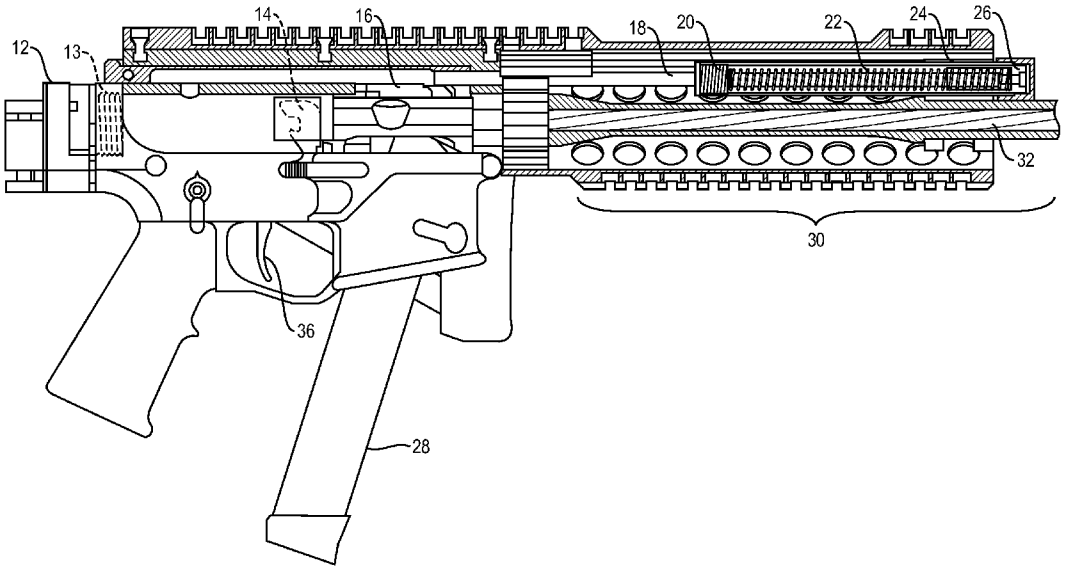

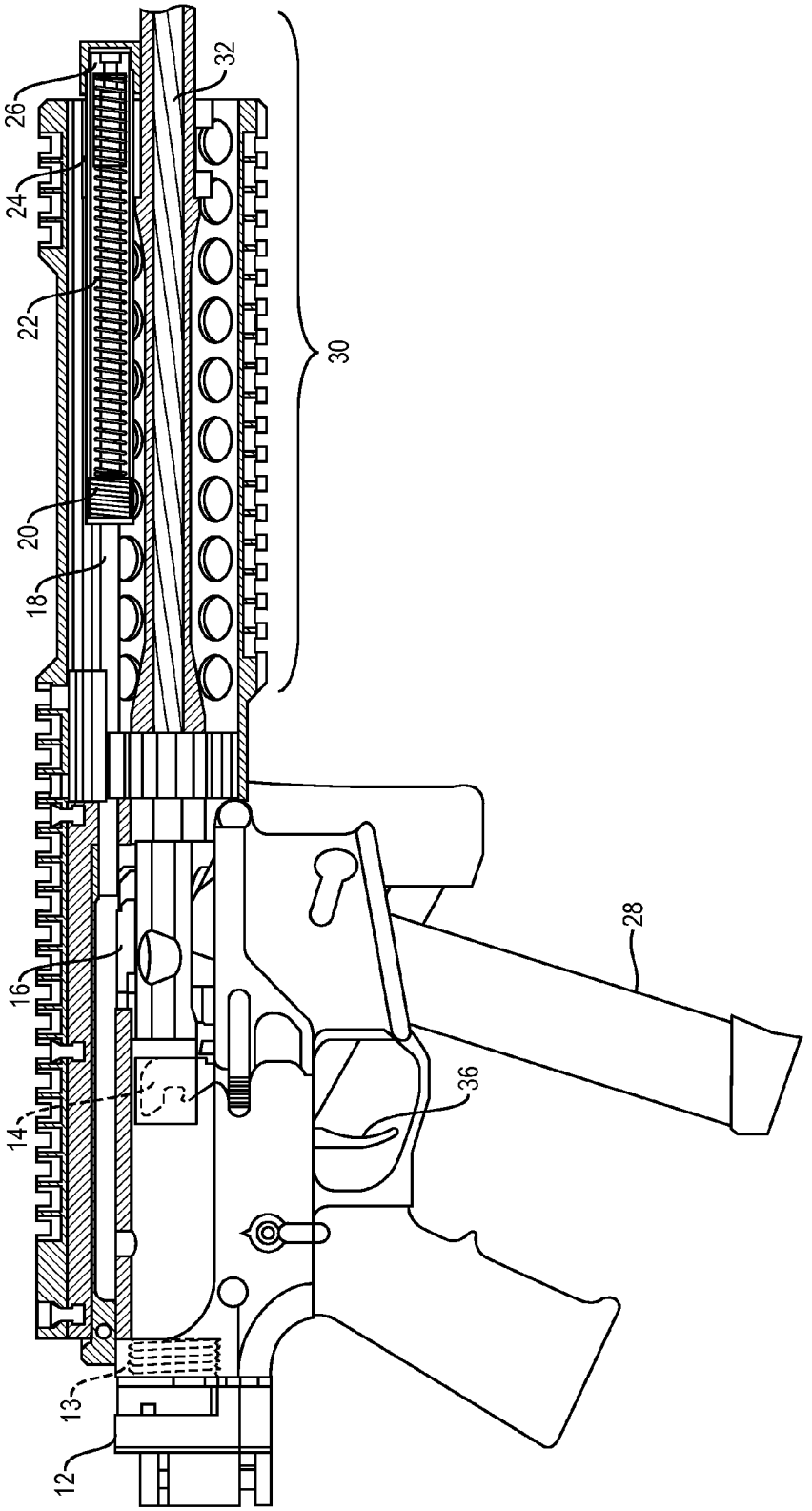

FIG. 1

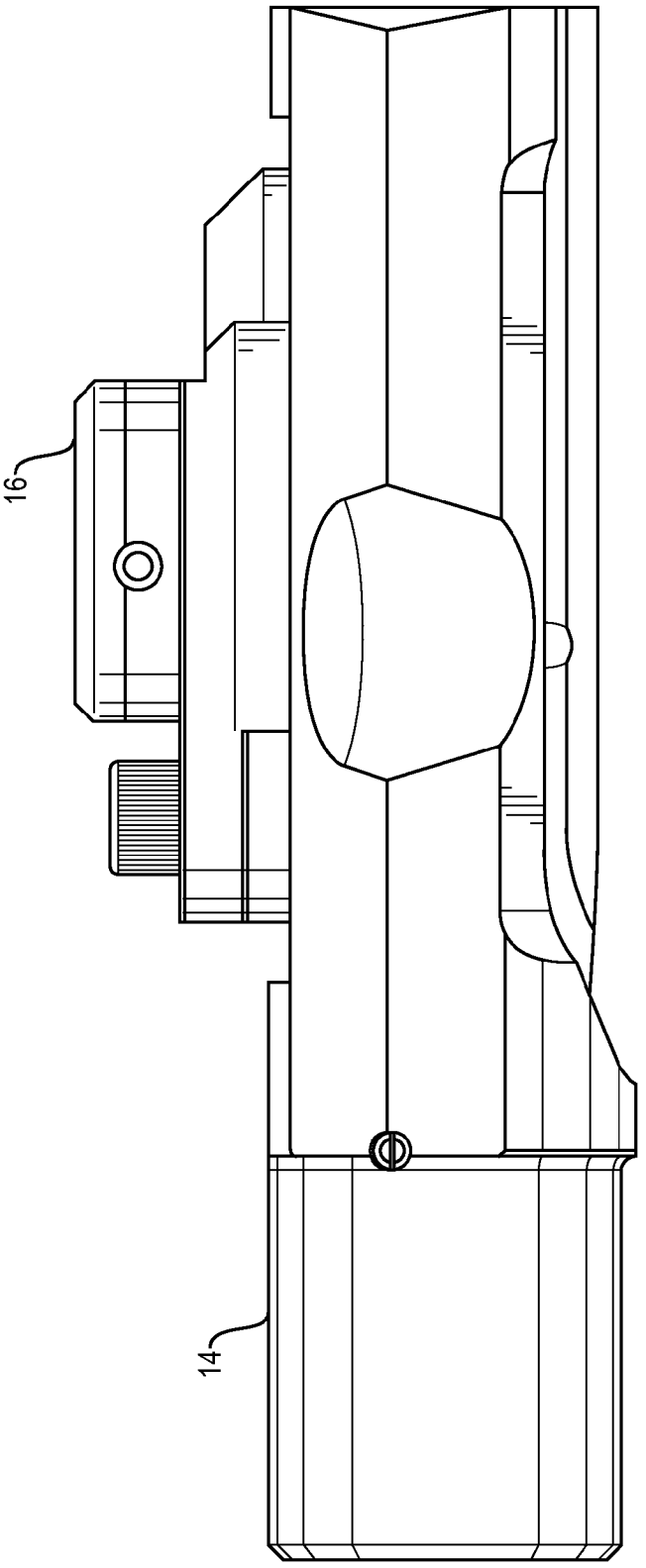

FIG. 2

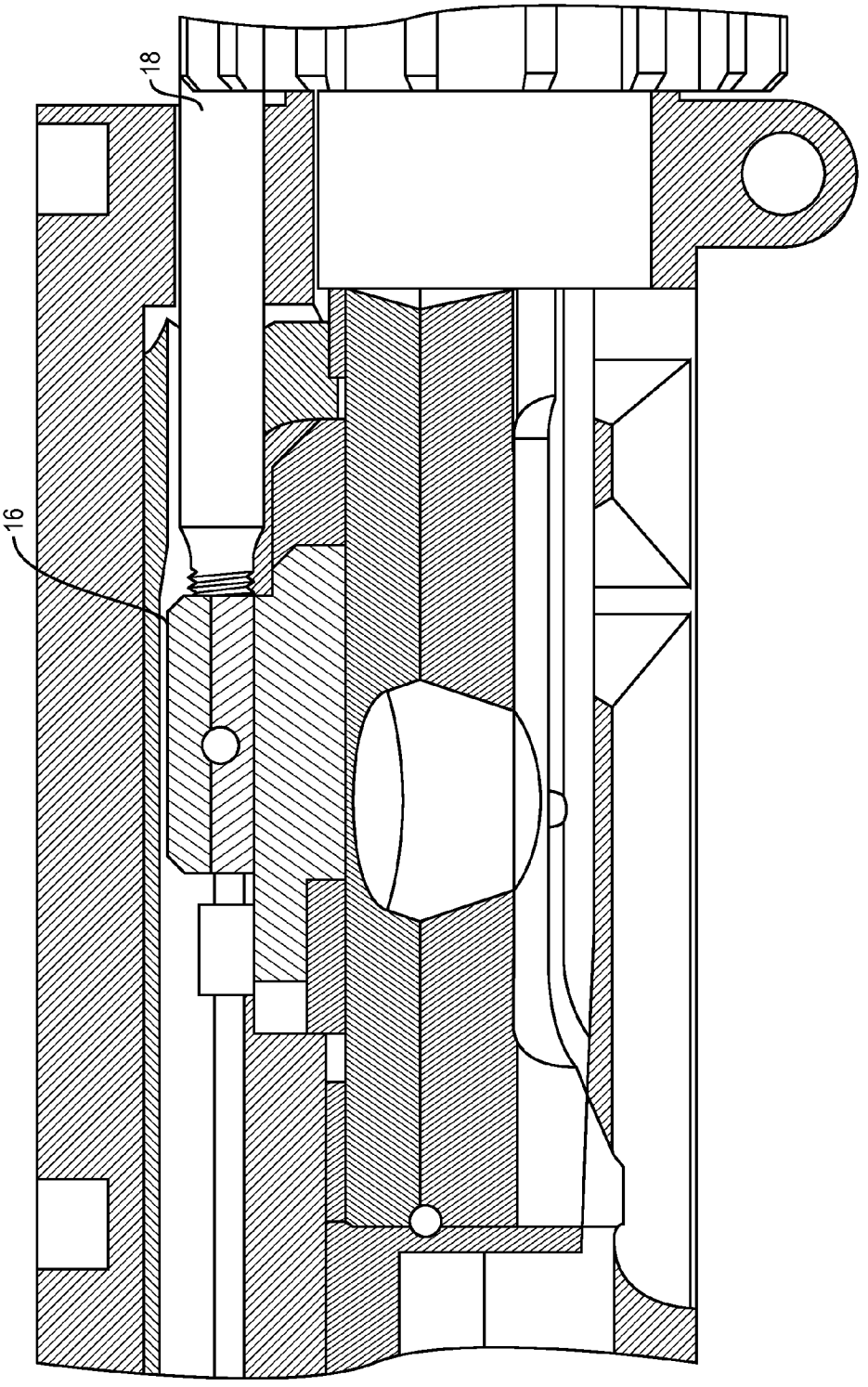

FIG. 3

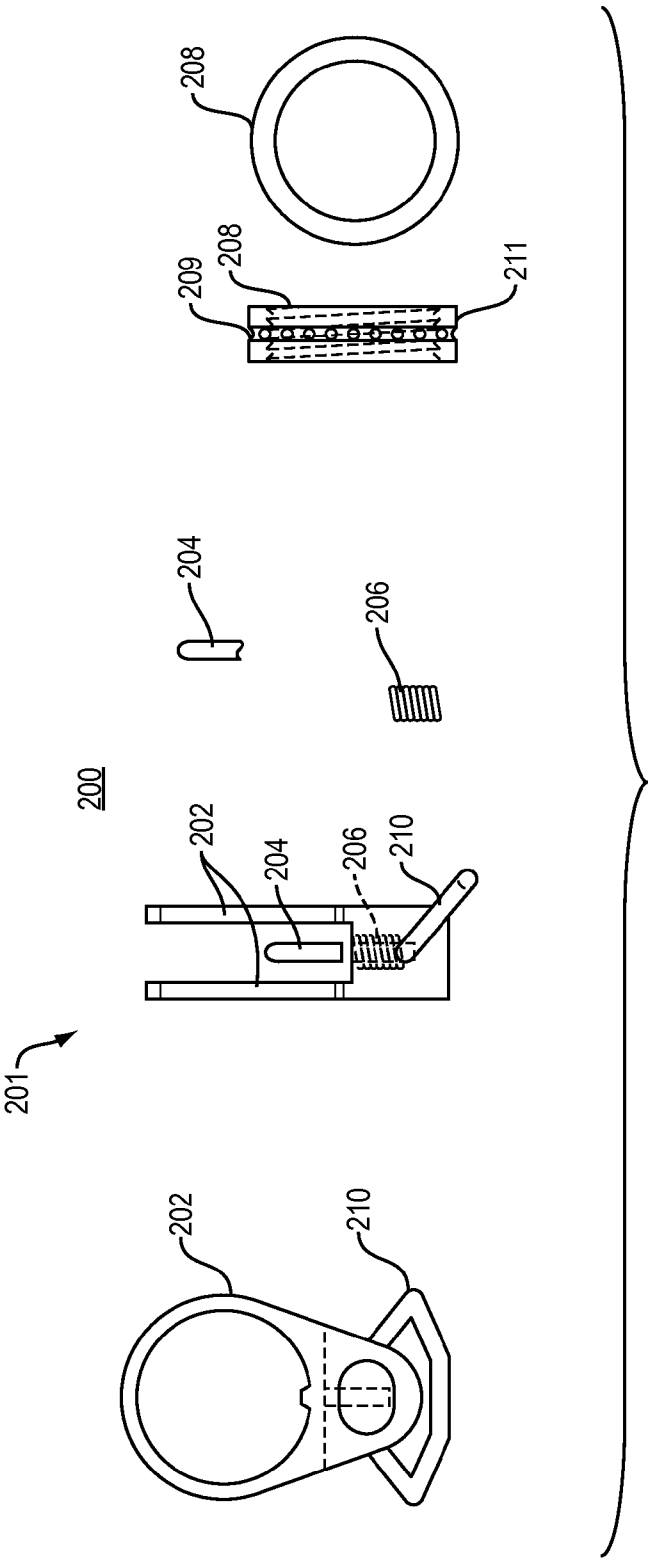

FIG. 4

PULSE RECOILING SYSTEM

CROSS-REFERENCE TO RELATED APPLICATIONS

[0001] This application claims priority from U.S. Provisional Patent Application No. 61/757,912 titled "Pulse Recoiling System" and filed on Jan. 29, 2013 and incorporated fully herein by reference.

TECHNICAL FIELD

[0002] The present invention relates to a modified recoil system for sub-cal firearms and more particularly, relates to a firearm pulse recoiling system and other firearm improvements.

BACKGROUND INFORMATION

[0003] Sub-cal rifle firearms are weapons that have been modified to fire a pistol cartridge rather than a rifle round. The use of a pistol cartridge with or without a magazine creates a firearm that is easier to maintain and load, and which is lighter weight. Using a magazine in a rifle fitted with the Pulse Recoil system also allows for interchangeability by a user that uses both a pistol and a rifle, because the same magazine can at times be used for both weapons.

[0004] Many rifles are considered too large for transport and storage. As a result, some of these rifles are outfitted with collapsible butt stocks, which when collapsed make the rifle smaller in length. In most if not all of such prior art rifles, the butt stock area of the rifle contains a firearm recoil system or mechanism. Although some butt stocks are collapsible, which makes the weapon smaller for transport and storage, the location of the recoil system in the butt stock requires the rifle to have a fixed or static buffer tube, dictating overall length. The current butt stock configuration would also be expected to be expanded when in use.

[0005] Prior art rifles feature a gas operated or direct impingement system that creates recoil even with anti-recoil systems in place. For example, known recoil systems include the prior art for the current recoil and buffering system for a typical AR15 rifle as well as the current recoil and buffering system for a typical AR15 carbine and AR15 9 mm carbine.

[0006] The standard operation of the current AR15 9 mm carbine involves loading the weapon and then depressing the trigger. A hammer strikes the firing pin, the cartridge discharges, and the weight of the 9 mm bolt, the rearward tension of the buffer and the buffer spring hold the cartridge in chamber for a fraction of a second after discharge. The bolt then cycles rearward ejecting the spent casing and impacting the buffer. Recoil is then absorbed by the buffer and compressing of the buffer spring being transferred through the butt stock, thus onto the shooters shoulder.

[0007] Accordingly, what is needed is a sub-cal rifle that does not require a butt stock or that can use a much smaller foldable butt stock due to a relocation of the pulse recoiling system. The rifle should exhibit a fairly significant reduction in recoil, as well as creating a design that requires less space and is lighter in weight.

SUMMARY

[0008] In a first embodiment of the present invention, a pulse recoiling system for use in a sub-cal rifle comprises a static buffer housing attached to an upper portion of a barrel of a rifle or pistol; an operating rod at least partially enclosed in the static buffer housing; a recoil spring surrounding a portion of the operating rod, the recoil spring located within the static buffer housing, with a small round spacer on a first end of the recoil spring and an off-set pressure cap on a second end of the recoil spring; and a bolt containing a captured spring loaded firing pin, with a transfer block located on top of the bolt, the operating rod is connected by threaded into the transfer block.

[0009] The invention also features a ratcheting gusset for a weapon, comprising a double end plate. The double end plate including a first plate having a coupling region and a second end plate having a coupling region. The first and second end plates have a generally open central region and are coupled together in a spaced relationship at their respective coupling regions.

[0010] A ratchet ring having a generally circular central threaded region and a generally circular exterior region is provided. The generally circular exterior region including a plurality of concave indentations spaced generally uniformly on the circular exterior region. A spring loaded detent is disposed in the coupling region of the double and plate. The spring loaded detent includes a convex end configured for interfacing with one of the plurality of concave indentations on the circular exterior region, for preventing the ratchet ring from becoming unthreaded away from a portion of the weapon.

[0011] It is important to note that the present invention is not intended to be limited to a system or method which must satisfy one or more of any stated objects or features of the invention. It is also important to note that the present invention is not limited to the preferred, exemplary, or primary embodiment(s) described herein. Modifications and substitutions by one of ordinary skill in the art are considered to be within the scope of the present invention.

BRIEF DESCRIPTION OF THE DRAWINGS

[0012] These and other features and advantages of the present invention will be better understood by reading the following detailed description, taken together with the drawings wherein:

[0013] FIG. **1** is a detailed view of the rifle according to an embodiment of the present invention;

[0014] FIG. **2** is a detailed view of the bolt according to one embodiment of the present invention;

[0015] FIG. **3** is a detailed view of an operating rod interconnected with a bolt by means of a transfer block according to one embodiment of the present invention; and

[0016] FIG. **4** is a detailed exploded view of the ratcheting gusset according to another embodiment of the present invention

DETAILED DESCRIPTION OF THE PREFERRED EMBODIMENTS

[0017] The present invention features a pulse recoil system that is located in the front of the weapon over the barrel portion **30** of the rifle/pistol/weapon **10**, FIG. **5**. Prior art weapon platforms feature the recoil system in the rear or butt stock of the rifle. The rifle **10** of the present invention is designed as a pulse blow-back recoil operating sub-cal weapon platform. Sub-cal is defined as any caliber automatic (i.e. 22, 0.380, 9 mm, 40, 10 mm, 45ACP, 50AE ammunition type) that can be used both in a pistol platform and a rifle platform. The blow-back system does not require gas to

unlock the bolt (direct impingement systems in the prior art are gas operated). The rifle **10** uses pistol magazines **28** and standard sub machine gun (smg) magazines for feeding. The assembly of the present invention is adaptable to several different types of after-market lower receivers, thus making the assembly versatile.

[0018] The bolt **14** (shown in greater detail in FIG. **2**) and the recoiling system have been altered from the traditional configuration by reengineering and relocating the overall buffering/recoil system. The standard factory AR15 9 mm bolt (prior art bolt) is longer and heavier than the bolt **14** of the present invention because the prior art bolt requires a counter weight located in the rear of the AR15 factory 9 mm bolt. The bolt **14** of the present invention is significantly shorter than the prior art bolt. Further and most importantly, the bolt **14** of the present invention has been modified to accept the operating rod **18** utilizing a specific bolt key or transfer block **16** that allows for retention of the operating rod **18** and operatively connecting the connecting rod **18** to the bolt **14**. The operating rod **18** connects to the transfer block **16** located on top of the bolt **14**. Further, the counter weight required in the prior art is no longer needed in the design of the present invention.

[0019] The prior art recoiling systems of the AR15 was located in the rear of the weapon and incorporates a receiver extension, buffer and action spring. The present invention uses a pulse recoil system (PRS) which is located forward in the weapon, over the barrel **32**. The pulse recoil system uses a modified AR15 9 mm style bolt **14** which is connected to an operating rod **18**, thereby eliminating the need for a receiver extension, buffer and action spring.

[0020] The operating rod **18** is enclosed in a static buffer housing **24** which is attached to the barrel **32**. Once installed, a small round spacer **20** and recoil spring or forward buffer spring **22** are retained in the housing by a captured off-set pressure cap **26**. As a result, the pulse recoiling system of the present invention drastically improves the dynamic recoil pulse normally felt when shooting standard AR15 (rear recoiling) 9 mm platforms. The reduced weight and positive case ejection of the weapon **10** are further benefits that result from the pulse recoiling system.

[0021] In use, the weapon **10** is loaded and the trigger **36** is pulled. Once the trigger **36** is pulled, a hammer strikes a firing pin and the cartridge discharges (all as well known in the art). At this point, the recoil spring **22** is at rest or at its least amount of compression. The forward spring tension of the recoil spring **22** on the operating rod **18** connected to the bolt **14** by means of the transfer block **16** hold the cartridge in the chamber for a fraction of a second after discharge. The discharge of the projectile from the cartridge forces the bolt **14** to cycle rearward, thereby ejecting the spent casing. The rearward movement of the bolt **14** pulls the operating rod **18** which is threaded into the transfer block **16** (as shown in FIG. **3**) rearward as well, thereby compressing the recoil spring **22**, which restricts (limits or dampens) the length or amount of travel of the bolt **14**. The recoil is thus transferred forward of the weapon over the length of the operating rod **18**, thus minimizing the felt recoil to the user.

[0022] As such, the weapon with a pulse recoil system according to the present invention features forward-directed spring pressure. The spring pulls the operating rod **18** and bolt **14** forward until the rifle fires. The small round spacer **20** and the off-set pressure cap **26** both serve as spacers on either end of the recoil spring **22**. The recoil spring **22** and the fired bullet counteract one another and essentially cancel each other, thereby reducing the pulse of energy from the recoil. Positive ejection of spent casings as well as a mild, balanced perceived recoil allows for faster and more accurate follow-up shots.

[0023] By locating the recoil system in the front portion of the weapon rather than in the butt stock as done in the prior art, the butt stock (the location of the prior art recoil systems) is no longer needed/required, thus resulting in a weapon that can be manufactured to be lighter and more compact (the butt stock adds considerable weight and size to the rifle while allowing the system of the invention to be utilized with pistols and other weapon systems).

[0024] However, it is also possible that a butt stock could be utilized with the present invention however, the butt stock is not required to house or otherwise become part of the recoil system. The use of a butt stock may depend on the preference of the user. If a butt stock is used, it is preferable that the butt stock be significantly lighter and more compact than butt stocks found in the prior art that are required to house recoil systems. For example, the rifle platform **10** of the present invention in conjunction with the pulse recoiling system can interface with a folding stock via a dedicated end plate adapter **12**.

[0025] Since the prior art recoil systems are housed in the butt stock, a tube **13** having a threaded end is provided into which the prior art recoil spring is housed and onto which threaded end a butt stock may be fastened. In the prior art, the butt stock is fastened onto the recoil spring tube **13** utilizing a castle nut and end plate. However, the castle nut and the end of the threaded recoil spring tube **13** are punch or "staked" together to prevent the castle nut from become loosened, such that removing the butt stock requires tools and cannot be done in the field as it requires tools to do so.

[0026] In a further embodiment of the present invention, a ratcheting receiver gusset **200**, FIG. **4**, is a newly designed reinforced removable gusset for a butt stock according to one feature of the present invention which replaces the traditional castle nut and end plate previously used. The ratchet gusset **200** can be used independently with many butt stocks. The ratchet gusset **200** features several unique features. The ratchet gusset **200** incorporates a heavy duty design, by providing a double end plate **201** doubling the standard endplate by utilizing essentially two end plates **202** used to secure the standard butt stock assembly to any AR15 rifle. This is known to be the weakest point of the rifle. The ratchet gusset **200** utilizes a de-tent **204** and spring **206**. The de-tent **204** rests in one of the many concave holes or depressions **209** on the exterior surface **211** of the ratchet ring **208**, to secure the ratchet ring **208** which has an interior threaded region in position and ensure that the ratchet ring does not unthread from the buffer tube assembly.

[0027] In use, the butt stock is provided with a threaded tube that screws into the end region of the weapon **10**. The ratchet ring **208** is turned to advance the end plate assembly **202** up against the end region of the weapon **10**. The de-tent **204** will come to rest in one of the many concave holes **209** in the exterior surface **211** of the ratchet ring **208**, ensuring that the ratchet ring **208** will not come loose. The ratchet gusset **200** can be easily removed by reversing the tightening procedure of the ratchet ring **208**. This makes the changing of different butt stock assemblies very easy and can be accomplished in the field without tools. This is not an option with the conventional designs where butt stocks are permanently

attached to rifles as found in the prior art. The ratchet may also include a 180 degree sling loop **210**. The ratchet **200** is preferably made from 4140 steel.

[0028] Accordingly, the present invention features an improved pulse recoiling system that moves the recoil system from the butt stock to in or over the barrel portion of the rifle, thereby creating a lighter firearm that requires less space and which results in a reduction in the recoil produced when the weapon is fired, as well as a novel ratcheting receiver gusset.

[0029] Modifications and substitutions by one of ordinary skill in the art are considered to be within the scope of the present invention, which is not to be limited except by the allowed claims and their legal equivalents.

The invention claimed is:

1. A pulse recoiling system for use in a sub-cal weapon, said pulse recoiling system comprising:

a static buffer housing attached and parallel to an upper portion of a barrel of a weapon;

an operating rod at least partially slidably disposed in said static buffer housing;

a recoil spring surrounding at least a portion of said operating rod, said recoil spring located within said static buffer housing, said recoil spring having a small round spacer on a first end of said recoil spring and an off-set pressure cap on a second end of said recoil spring, wherein at rest, said spring exerts a forward spring tension on said operating rod; and

a bolt having a transfer block located on top of said bolt, said bolt operatively connected to a first end of said operating rod, said pulse recoil system configured such that after said sub-cal weapon is loaded with a cartridge in a firing chamber and a trigger is depressed, a hammer strikes a firing pin and said cartridge discharges following which said forward spring tension on said operating rod hold the cartridge in said firing chamber for a fraction of a second after said cartridge discharges following which said bolt and said attached operating rod then cycles rearward, the discharged cartridge casing is ejected from said weapon, and wherein the recoil spring is compressed an amount, wherein said amount of compression is dictated by the amount of force projected onto the recoil spring, thereby restricting the length of travel of the bolt and wherein recoil from said cartridge discharge is transferred forward of the weapon over the length of the operating rod, thereby minimizing the recoil felt by a user.

2. A ratcheting gusset for a weapon, comprising:

a double end plate, said double end plate including a first plate having a coupling region and a second end plate having a coupling region, said first and second end plates having a generally open central region and coupled together in a spaced relationship at their respective coupling regions;

a ratchet ring having a generally circular central threaded region and a generally circular exterior region, said generally circular exterior region including a plurality of concave indentations spaced generally uniformly on said circular exterior region;

a spring loaded detent, disposed in said coupling region of said double and plate, said spring loaded detent including a convex end configured for interfacing with one of the plurality of concave indentations on said circular exterior region, for preventing said ratchet ring from becoming unthreaded away from a portion of said weapon.

* * * * *